Segen Solar (Pty) Ltd

DESIGN CONSIDERATIONS

TECHNICAL TRAINING – February 2023



PRODUCT OVERVIEW







OFF-GRID RANGE

- **OG1.24/3.24/5.48**
- **OG3.6/7.2/10**
- **OGS5.6**
- **OG PLUS3.24/5.48/6.2**

BATTERY RANGE

- **BL3.6**
- **FL5.2**

Contact SegenSolar (PTY) Ltd | **Email: info@segensolar.co.za | Tel: 011 085 2600**

OFF-GRID RANGE

OFF-GRID INVERTER?

- Designed for locations with **poor/no-grid conditions**
- Does not synchronize with Grid.
- Batteries are mandatory battery to store all energy generated by the panels for use later on in the day/loadshedding.
- **Bypasses grid** to load under certain conditions
- Recommended solutions are **off-grid applications**

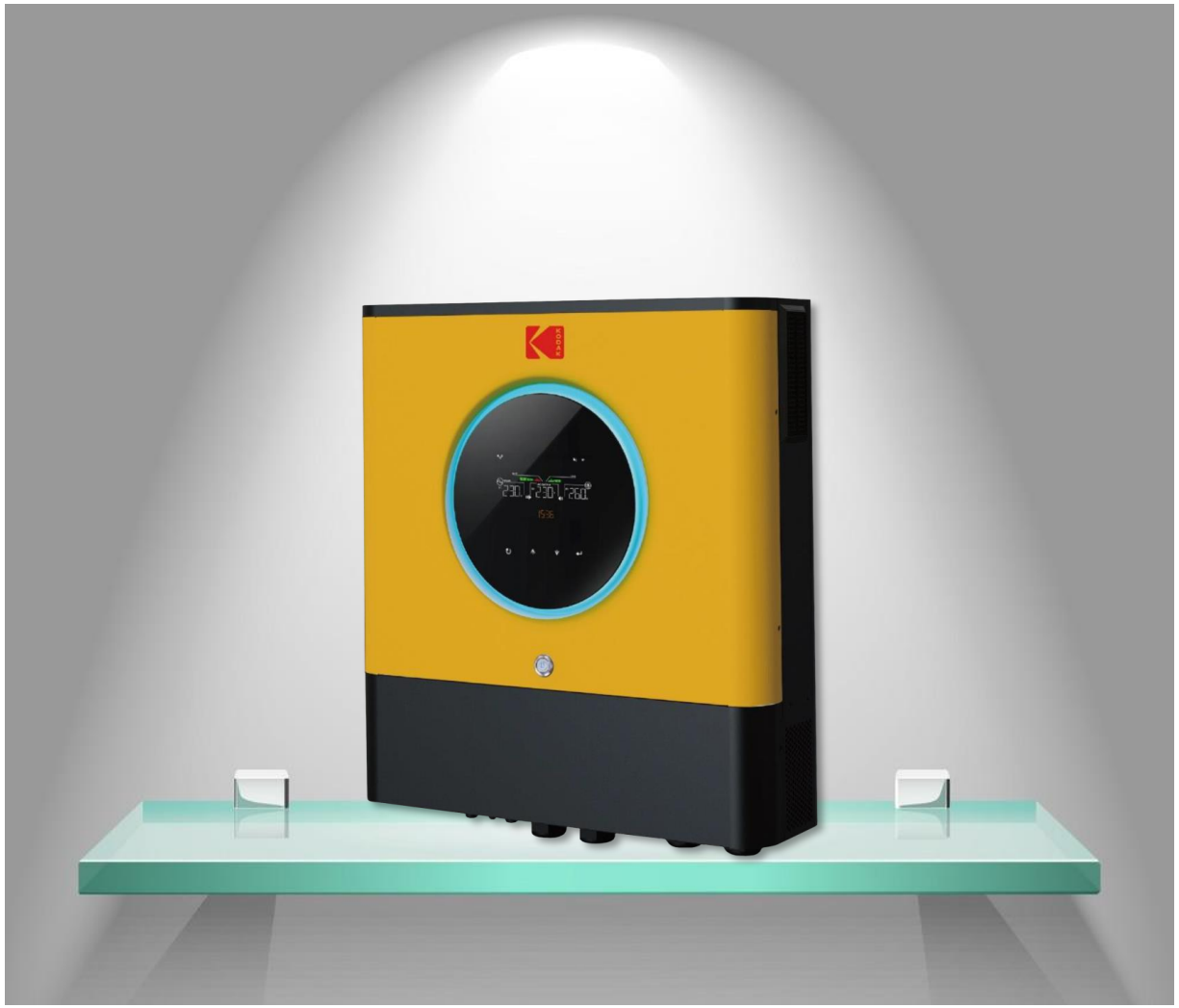

KEY POINTS…

- **Parallel** operation
- Built-in **MPPT**
- Built-in **AC charger**
- **RS485** communication
- **Bluetooth/Wi-Fi**
- Generator **compatible**

Features differ depending on model

Contact SegenSolar (PTY) Ltd | **Email: info@segensolar.co.za | Tel: 011 085 2600**

OFF-GRID RANGE

WHEN TO USE OFF-GRID?

- **UPS** system
- **No-grid** connection
- **Rural** area
- **Bad** grid power
- **Cost effective solution**



Contact SegenSolar (PTY) Ltd | **Email: info@segensolar.co.za | Tel: 011 085 2600**

OFF-GRID RANGE

COMPARISON TO OTHER PRODUCTS

- Very good value, pure sine-wave output, including built in charger and MMPT
- Economical entry point into solar vs. other systems
- Repairable by Segen Solar
- **3-year** warranty
- Compatible with most batteries
- Segen assured
- Solution can be generated by Kit Builder



OFF-GRID RANGE – OG1.24

PRODUCT FEATURES

- **1500W rated capacity**
- Double rating surge capacity
- **2000W MPPT**
- Suited for small domestic systems where later expansion is not needed
- **Wide MPPT voltage range makes DC string design with your choice of module easy**
- Built-in Bluetooth for mobile monitoring
- Generator compatible
- **BMS communication for optimal Li-Ion management**
- **Compatible solutions can easily be generated in Kit Builder**



Contact SegenSolar (PTY) Ltd | **Email: info@segensolar.co.za | Tel: 011 085 2600**

OFF-GRID RANGE - OG3.24 & 5.48

PRODUCT FEATURES

- **3000W** and **5000W** option available in **24V & 48V** respectively
- Double rating surge capacity
- **4000W MPPT** on OG3.24 inverter & **5000W MPPT** on OG5.48 inverter
- Suited for small domestic systems where later expansion is not needed
- **Wide MPPT voltage range makes DC string design with your choice of module easy**
- Built-in Bluetooth for mobile monitoring
- Generator compatible
- **BMS communication for optimal Li-Ion management, perfect for pairing with the FL5.2(48V only)**
- **Compatible solutions can easily be generated in Kit Builder**



Contact SegenSolar (PTY) Ltd | **Email: info@segensolar.co.za | Tel: 011 085 2600**

OFF-GRID RANGE - OG-PLUS3.24 & 5.48

PRODUCT FEATURES

- **3000W** and **5000W** option available in **24V & 48V** respectively
- Double rating surge capacity
- Always **230V AC** on output
- 0ms change over from grid to battery
- **1500W MPPT** on OG-PLUS3.24 inverter & **4000W** on OG-PLUS5.48 inverter
- Up to **9 units** in parallel – Suited for medium to large domestic applications
- Built-in Bluetooth for mobile monitoring
- Generator compatible
- **BMS communication for optimal Li-Ion management, perfect for pairing with the FL5.2(48V)**
- **Compatible solutions can easily be generated in Kit Builder**



Contact SegenSolar (PTY) Ltd | **Email: info@segensolar.co.za | Tel: 011 085 2600**

OFF-GRID RANGE – OG3.6

PRODUCT FEATURES

- **3600W** rated capacity with double surge rating capacity
- Boasts of a single **4000W MPPT**
- Wide MPPT voltage range makes DC string design with your choice of module easy
- Suited for small domestic systems where later expansion in not needed
- Improved communication with integrated onboard Wi-Fi
- RGB LED indicates the working mode
- **BMS communication for optimal Li-Ion management, perfect for pairing with the FL5.2**
- **Compatible solutions can easily be generated in Kit Builder**



Contact SegenSolar (PTY) Ltd | **Email: info@segensolar.co.za | Tel: 011 085 2600**

OFF-GRID RANGE - OGS5.6

PRODUCT FEATURES

- **5600W rated capacity**
- Double rating surge capacity
- **6000W MPPT**
- Up to **9 units** in parallel – Suited for medium to large domestic applications
- Wide MPPT voltage range makes DC string design with your choice of module easy
- Generator compatible
- Color LCD display
- Touch Buttons
- Built in Wi-Fi for online monitoring
- **Compatible solutions can easily be generated in Kit Builder**



Contact SegenSolar (PTY) Ltd | **Email: info@segensolar.co.za | Tel: 011 085 2600**

OFF-GRID RANGE - OG-PLUS 6.2

PRODUCT FEATURES

- **6200W** option available in **48V**
- **7000W MPPT**
- Double rating surge capacity
- Always **230V AC** on output
- 0ms change over from grid to battery
- Up to **9 units** in parallel – Suited for medium to large domestic applications
- Built-in Wi-Fi for online monitoring
- Generator compatible
- Dual output for essential loads
- **Compatible solutions can easily be generated in Kit Builder**



Contact SegenSolar (PTY) Ltd | **Email: info@segensolar.co.za | Tel: 011 085 2600**

OFF-GRID RANGE – OG7.2

PRODUCT FEATURES

- **7200W** rated capacity with double surge rating capacity
- Higher rating can power more devices with a single unit
- Duel MPPT **4000W** each total capacity of **8000W** split across **2 arrays**
- Split arrays allows for more design flexibility allowing for different roof spaces, orientations and angles
- Improved communication with integrated onboard Wi-Fi
- Parallel operation up to **6 units**
- **BMS communication for optimal Li-Ion management, perfect for pairing with the FL5.2**
- **Compatible solutions can easily be generated in Kit Builder**



Contact SegenSolar (PTY) Ltd | **Email: info@segensolar.co.za | Tel: 011 085 2600**

OFF-GRID RANGE – OG10

PRODUCT FEATURES

- **10000W** rated capacity with double surge rating capacity
- Higher rating can power more devices with a single unit
- Duel MPPT **5000W** each total capacity of **10000W** split across **2 arrays**
- Split arrays allows for more design flexibility allowing for different roof spaces, orientations and angles
- Improved communication with integrated onboard Wi-Fi
- Parallel operation up to **6 units**
- **Color LCD display with touch buttons**
- **BMS communication for Li-Ion compatbility**
- **Compatible solutions can easily be generated in Kit Builder**



Contact SegenSolar (PTY) Ltd | **Email: info@segensolar.co.za | Tel: 011 085 2600**

FL5.2

PRODUCT FEATURES

- **5.12 kWh** rated capacity
- **1C** charge and discharge capability – Recommended charge/discharge – **100A**
- **7200W** discharge for **15** seconds
- High charge/discharge efficiency > **98%** ideal for cycling applications
- Over **6000** cycles delivering value in cycling applications
- Up to **12 units** in parallel allowing a combined **61.44 kWh** deployment
- **10-year** warranty
- **Cost effective** 1C battery



Contact SegenSolar (PTY) Ltd | **Email: info@segensolar.co.za | Tel: 011 085 2600**

BL3.6

PRODUCT FEATURES

- **3,686 kWh** rated capacity
- **1,5C** discharge capability – Recommended discharge – **115A**
- **5000W** Continuous discharge power – only 1 battery required for 5kW system
- **6000W** discharge for **15** seconds
- Over **6000** cycles @ 80% DoD or **3600** cycles @ 95% DoD
- Up to **15 units** in parallel allowing a combined **55,29 kWh** deployment
- **10-year** warranty

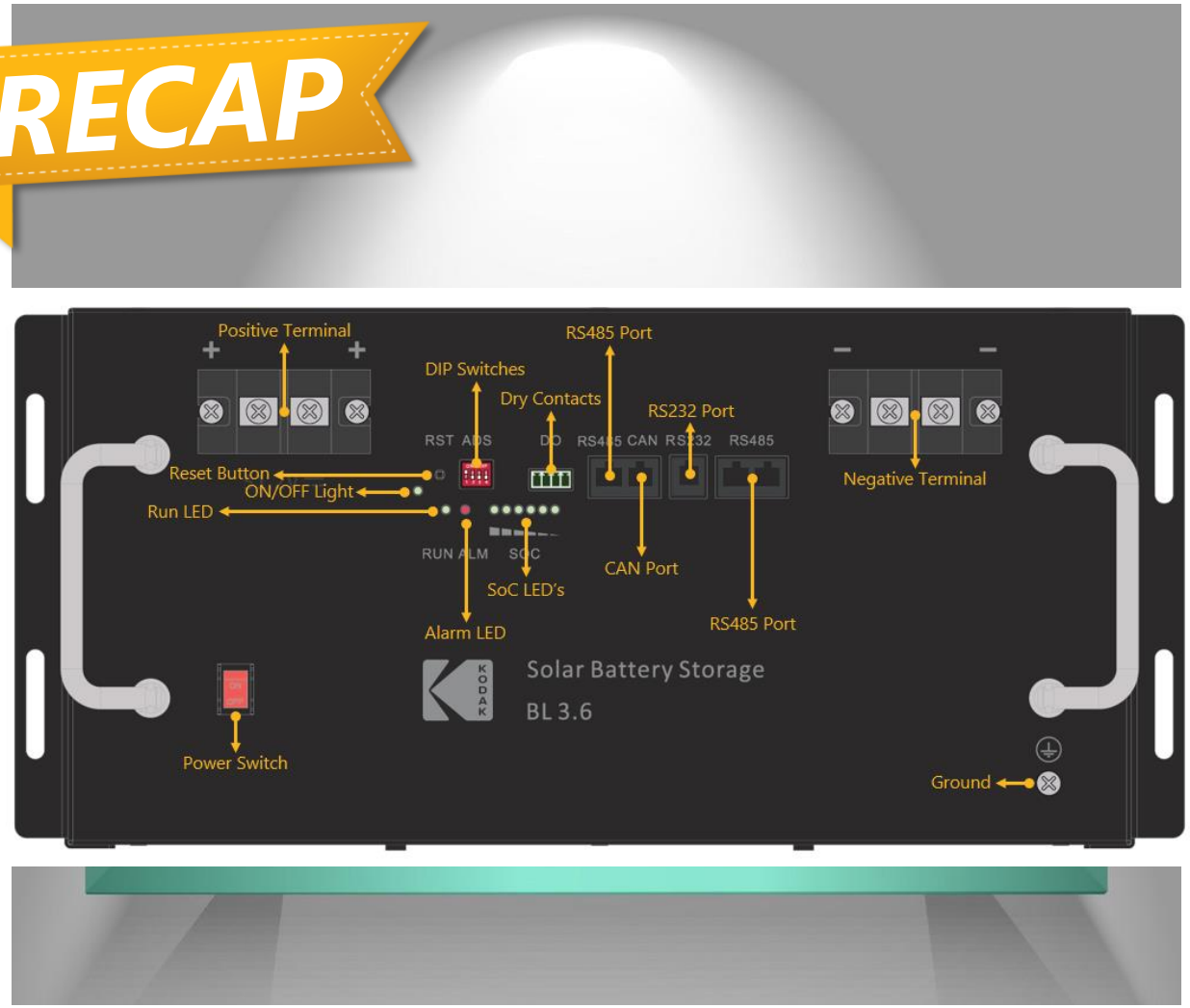

Contact SegenSolar (PTY) Ltd | **Email: info@segensolar.co.za | Tel: 011 085 2600**

OFF-GRID
QUICK SPECS

MODEL	Battery Voltage (V)	MPPT Range (V)	Max MPPT Power (W)	Solar Charger (A)	AC Charger (A)	Parallel Operation	RS485	Bluetooth	Wi-Fi
OG-7.2	48	90-450	8000	80	80	✓	✓	✗	✓
OG 5.48	48	120-430	5000	80	60	✗	✓	✓	✗
OG-PLUS5.48	48	60-115	4000	80	60	✓	✓	✓	✗
OG-3.6	24	120-450	4000	80	80	✗	✓	✗	✓
OG-PLUS3.24	24	30-115	1500	60	60	✓	✓	✓	✗
OG3.24	24	150-430	4000	80	70	✗	✓	✓	✗
OG1.24	24	120-380	2000	60	40	✗	✓	✓	✗
OG-PLUS3.48-RM	48	60-115	4000	80	60	✓	✓	✗	✓
OG-PLUS5.48-RM	48	60-115	4000	80	60	✓	✓	✗	✓
OGS5.6	48	120-450	6000	120	120	✓	✓	✗	✓
OG-10	48	90-450	10000	150	150	✓	✓	✗	✓
OG-PLUS6.2	48	120-450	7000	120	120	✓	✓	✗	✓

Contact SegenSolar (PTY) Ltd | **Email: info@segensolar.co.za | Tel: 011 085 2600**

KIT BUILDER DESIGNS OF OG RANGE

KIT BUILDER DESIGNS BENEFITS OF OG RANGE

- **3% discount** on all orders done through Kit Builder
- Quick and **easy to use**
- Only provides **solutions that work** – it will never match incompatible components
- **Never forget** important components
- Provides options of panels and batteries **proven to work**

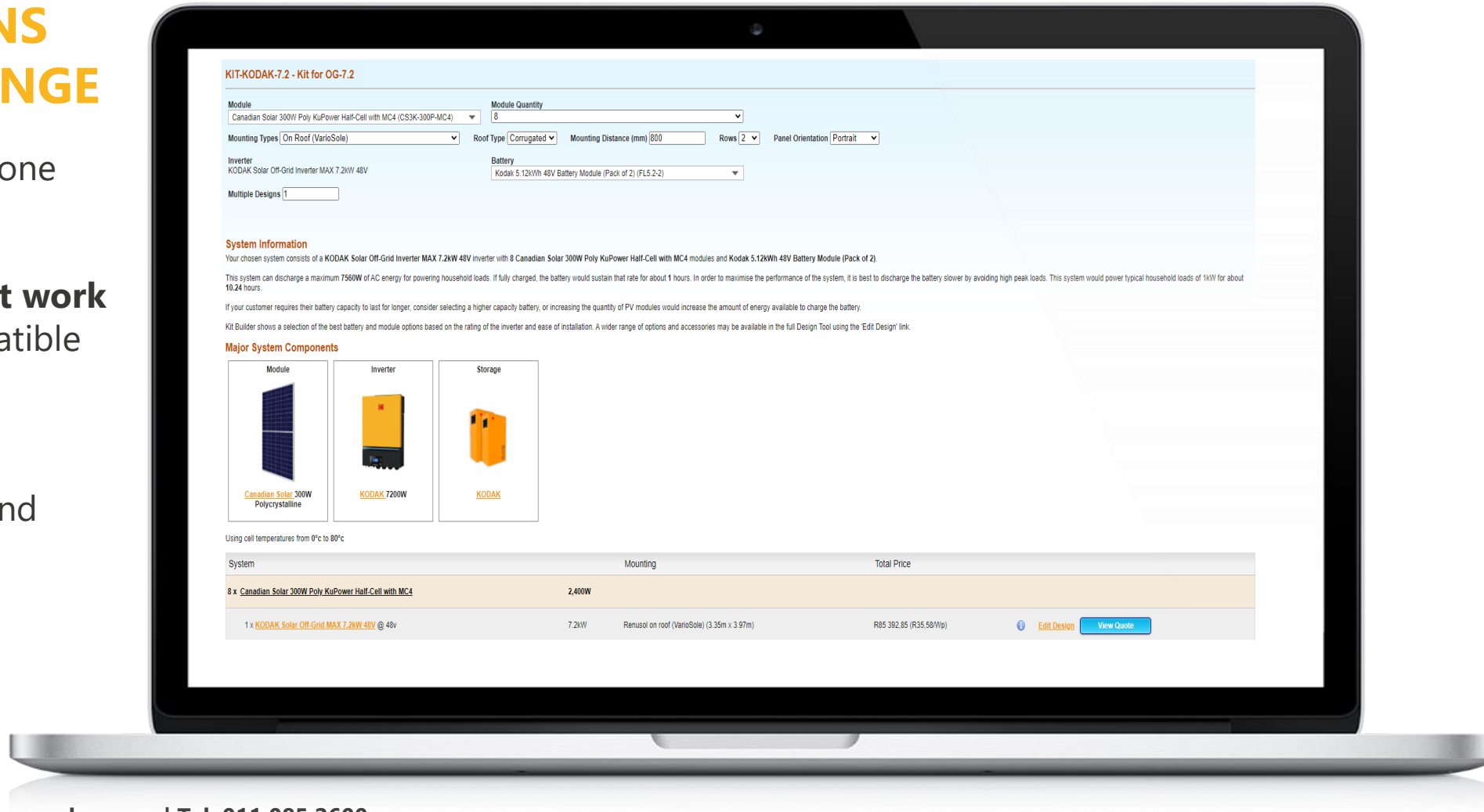

Contact SegenSolar (PTY) Ltd | **Email: info@segensolar.co.za | Tel: 011 085 2600**

OFF-GRID

COMPATIBILITY

OFF-GRID RANGE

OTHER COMPATIBLE BATTERIES

OG range with BMS communication is compatible with: **Kodak**, **Giter**, **Pylon US & UP series, Revov, Freedom Won & Hubble**



Contact SegenSolar (PTY) Ltd | **Email: info@segensolar.co.za | Tel: 011 085 2600**

OFF-GRID

INSTALLATION

OFF-GRID RANGE

Techie Tips!

Battery design:

- Battery bank must be able to supply the expected loads – if too small it will cause nuisance tripping.
- Battery bank needs to be able to accommodate PV array wattage – if bank is too small , sudden load changes may cause voltage spikes on the battery bank causing trips.
- Never rely on the PV array or grid to “support” a bank that is too small, PV and grid may not be reliable.
- Do not rely on the battery BMS system to protect against overloads – rather have the inverter or AC protecting trip first.

PV design:

- Never assume the panel always has the same Voc – the Voltage written on the panel is for 25 degrees @ STC.
- Always take the coldest temperature into account when designing your array. When its colder, Voc increases.
- Careful of your system during winter, common point of failure is system operating fine in summer but MPPT failing in winter.

Overload protection:

- Reality is **there will always be chance of overload!!!** – Design the AC protection to accommodate this instead of relying on inverter/battery.
- While batteries and inverters have built in protection, there are limitations.
- Breakers have tripping curves, for instance a 5A breaker won’t immediately trip at 5A, please consult the breaker documentation for the desired characteristics that will best protect your inverter

OFF-GRID RANGE

Before & After installation

- There is a vast selection of panels available these days. The most important aspect to watch out for is your PV voltage.
- Ensure that the installer understands how to install and commission the system before going to site. This will avoid many potential challenges.
- Always consult documents before installing.
- Take note of application notes on the portal.
- Ensure the site is ready for installation.
- Ensure all components are included, even the measuring tools.
- Ensure power off on all equipment before installation.
- Never turn on grid or PV before first setting up the correct battery settings and ensuring BMS communication is working.
- Take photos of the installation, including the installed protection, without this it will not be possible to proceed with a warranty claim.

WIRING EXAMPLE

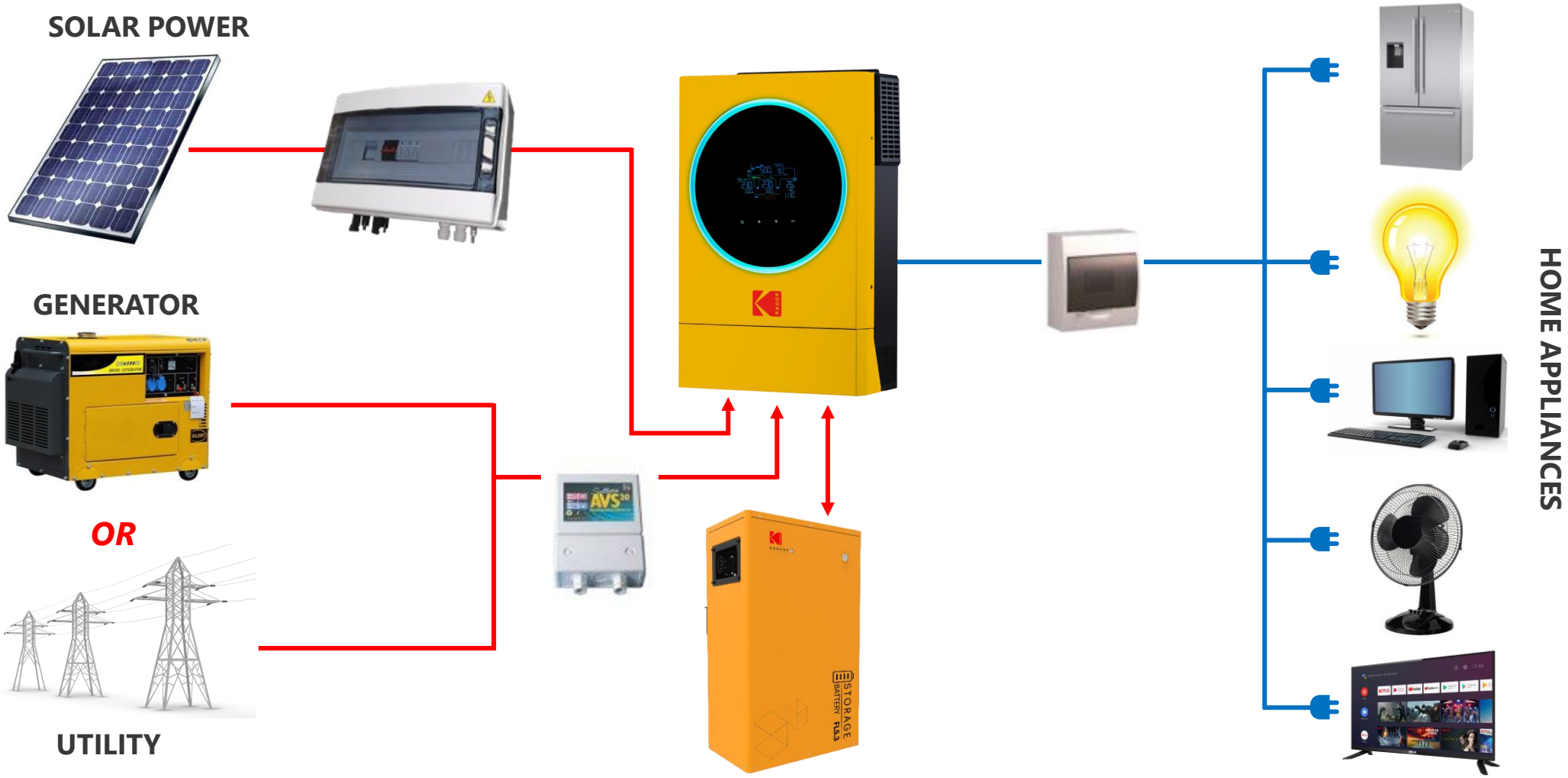

Contact SegenSolar (PTY) Ltd | **Email: info@segensolar.co.za | Tel: 011 085 2600**

OFF-GRID

Power Connections

Battery Input

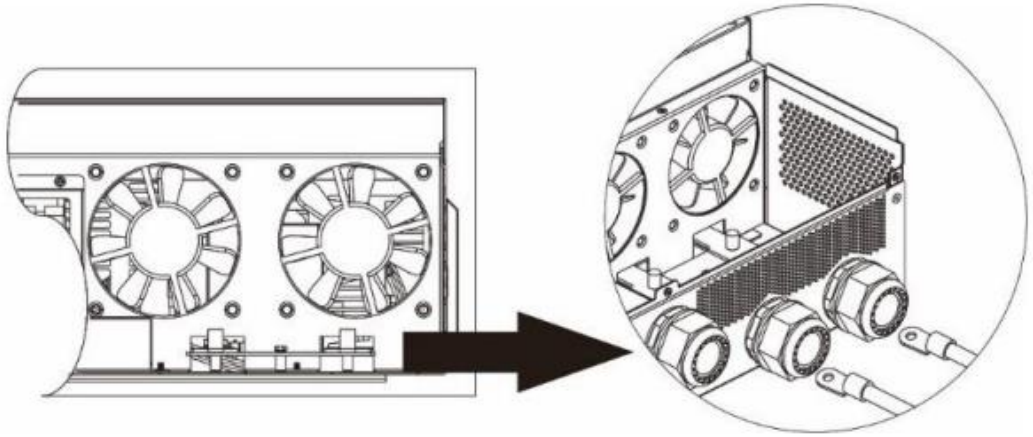

AC Grid & Load Input

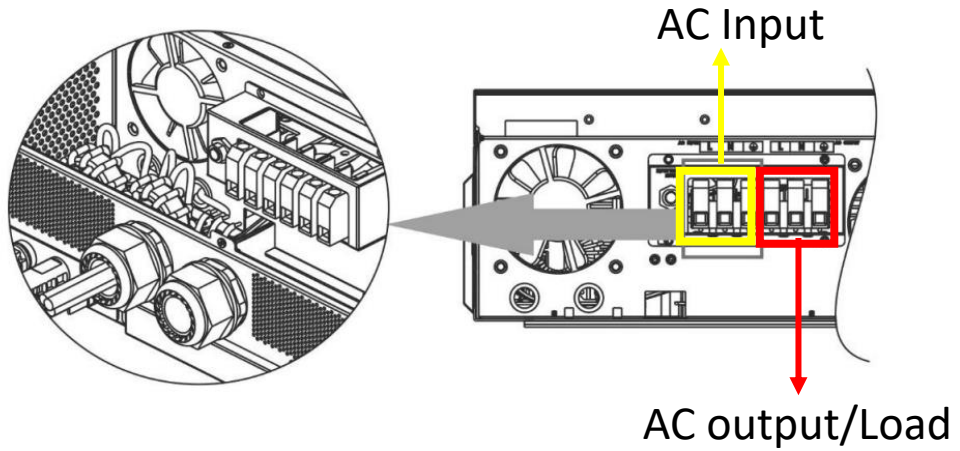

PV Input

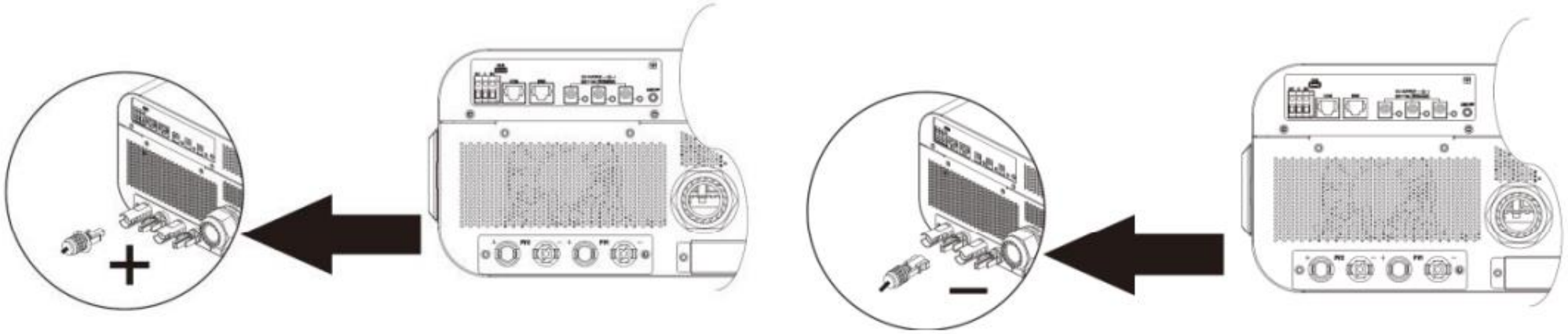

Setup guide with compatible batteries

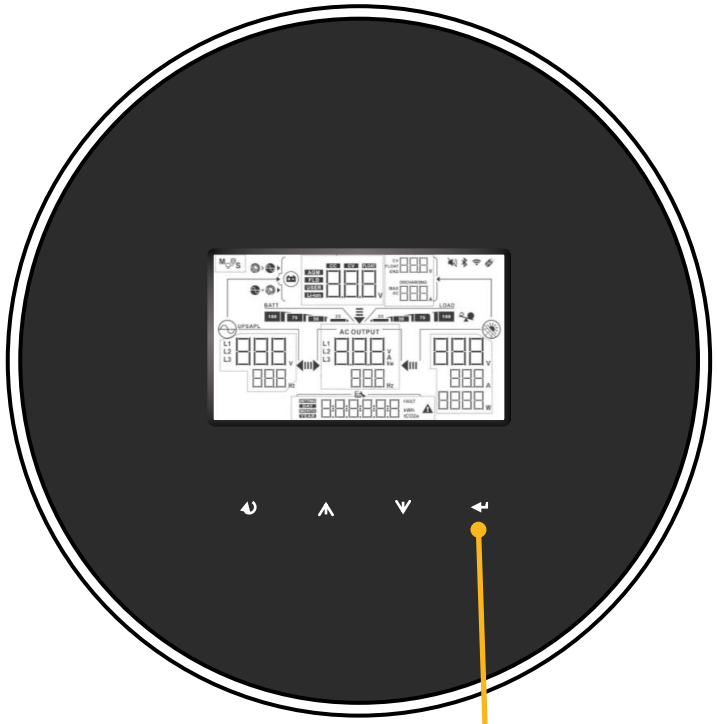

Long press to enter programming menu

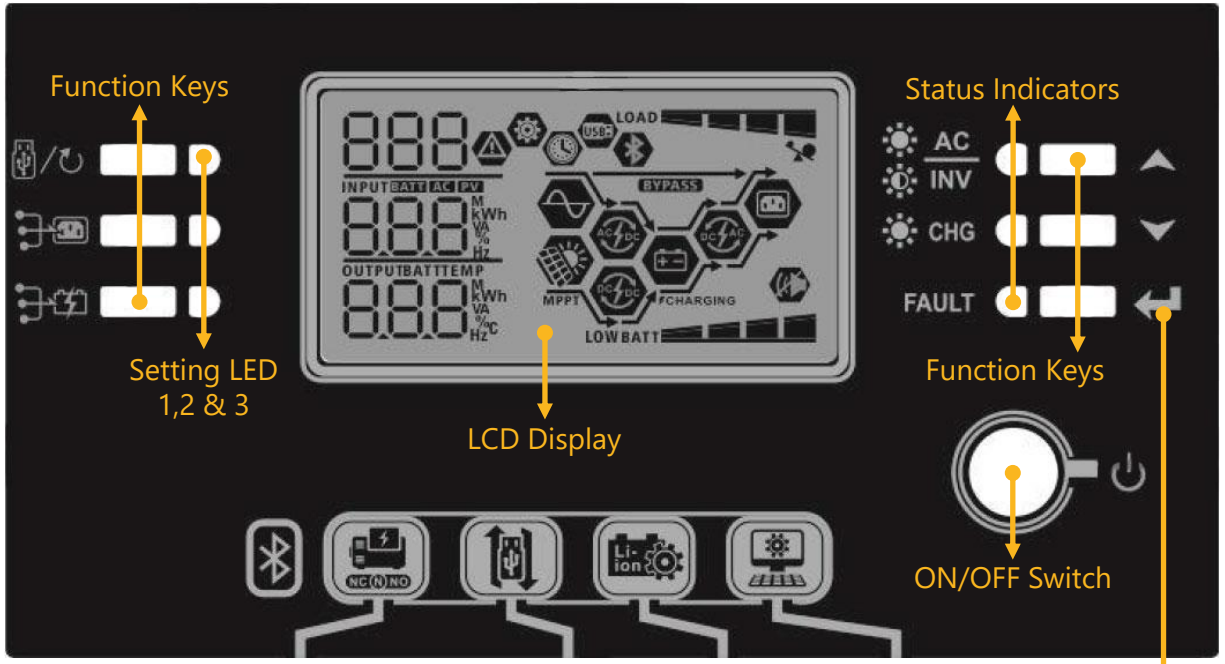

Setup guide with compatible batteries

FL5.2

BMS COMMUNICATION

- BMS communication cable **included in cable pack** – FL5.2-CABLE
- Using Kit Builder will ensure no parts are missed
- Ensure **DIP switches are correct**
- Select **PYL on program 05**

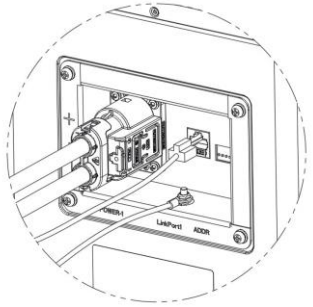





Number of batteries	Master	Slave 1	Slave 2	Slave 3	Slave 4	Slave 5	Slave 6	Slave 7	Slave 8	Slave 9	Slave 10	Slave 11
1	0001 0000											
2	0010 0000	0000 0001										
3	0011 0000	0000 0001	0000 0010									
4	0100 0000	0000 0001	0000 0010	0000 0011								
5	0101 0000	0000 0001	0000 0010	0000 0011	0000 0100							
6	0110 0000	0000 0001	0000 0010	0000 0011	0000 0100	0000 0101						
7	0111 0000	0000 0001	0000 0010	0000 0011	0000 0100	0000 0101	0000 0110					
8	1000 0000	0000 0001	0000 0010	0000 0011	0000 0100	0000 0101	0000 0110	0000 0111				
9	1001 0000	0000 0001	0000 0010	0000 0011	0000 0100	0000 0101	0000 0110	0000 0111	0000 1000			
10	1010 0000	0000 0001	0000 0010	0000 0011	0000 0100	0000 0101	0000 0110	0000 0111	0000 1000	0000 1001		
11	1011 0000	0000 0001	0000 0010	0000 0011	0000 0100	0000 0101	0000 0110	0000 0111	0000 1000	0000 1001	0000 1010	
12	1100 0000	0000 0001	0000 0010	0000 0011	0000 0100	0000 0101	0000 0110	0000 0111	0000 1000	0000 1001	0000 1010	0000 1011

Contact SegenSolar (PTY) Ltd | **Email: info@segensolar.co.za | Tel: 011 085 2600**

Setup guide with compatible batteries

BL3.6

BMS COMMUNICATION

- BMS communication cable **included with the KODAK OG inverter**
- Using Kit Builder will ensure no parts are missed
- Ensure **DIP switches are correct**
- Select **PYL on program 05**



Address	Position of the dial code switch			
	#1	#2	#3	#4
1	ON	OFF	OFF	OFF
2	OFF	ON	OFF	OFF
3	ON	ON	OFF	OFF
4	OFF	OFF	ON	OFF
5	ON	OFF	ON	OFF
6	OFF	ON	ON	OFF
7	ON	ON	ON	OFF
8	OFF	OFF	OFF	ON
9	ON	OFF	OFF	ON
10	OFF	ON	OFF	ON
11	ON	ON	OFF	ON
12	OFF	OFF	ON	ON
13	ON	OFF	ON	ON
14	OFF	ON	ON	ON
15	ON	ON	ON	ON

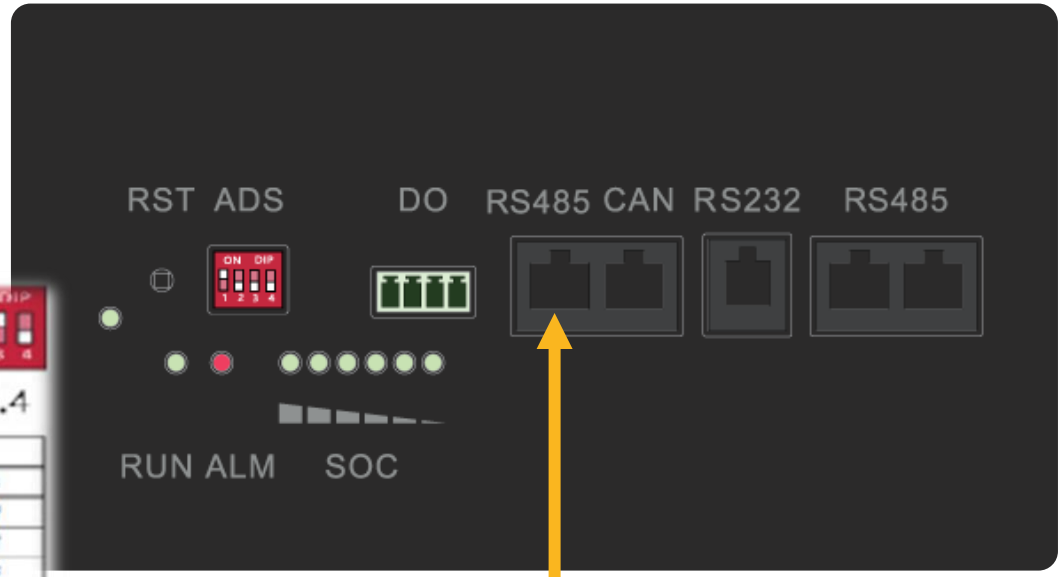

Setup guide with compatible batteries

Freedom Home Lite

- BMS communication cable – CANBUS to RS485 converter and 2 x straight ethernet cables needed.
- Using Kit Builder will ensure no parts are missed
- Select **“Lib” for program 05**

NB: If “Lib” option is not shown, update the inverter to the latest firmware.

E-tower

- BMS cable included with the battery.
- Select **Lib for program 05.**
- Ensure **DIP switches are correct**

1	ON	OFF	OFF	OFF
2	OFF	ON	OFF	OFF
3	ON	ON	OFF	OFF
4	OFF	OFF	ON	OFF

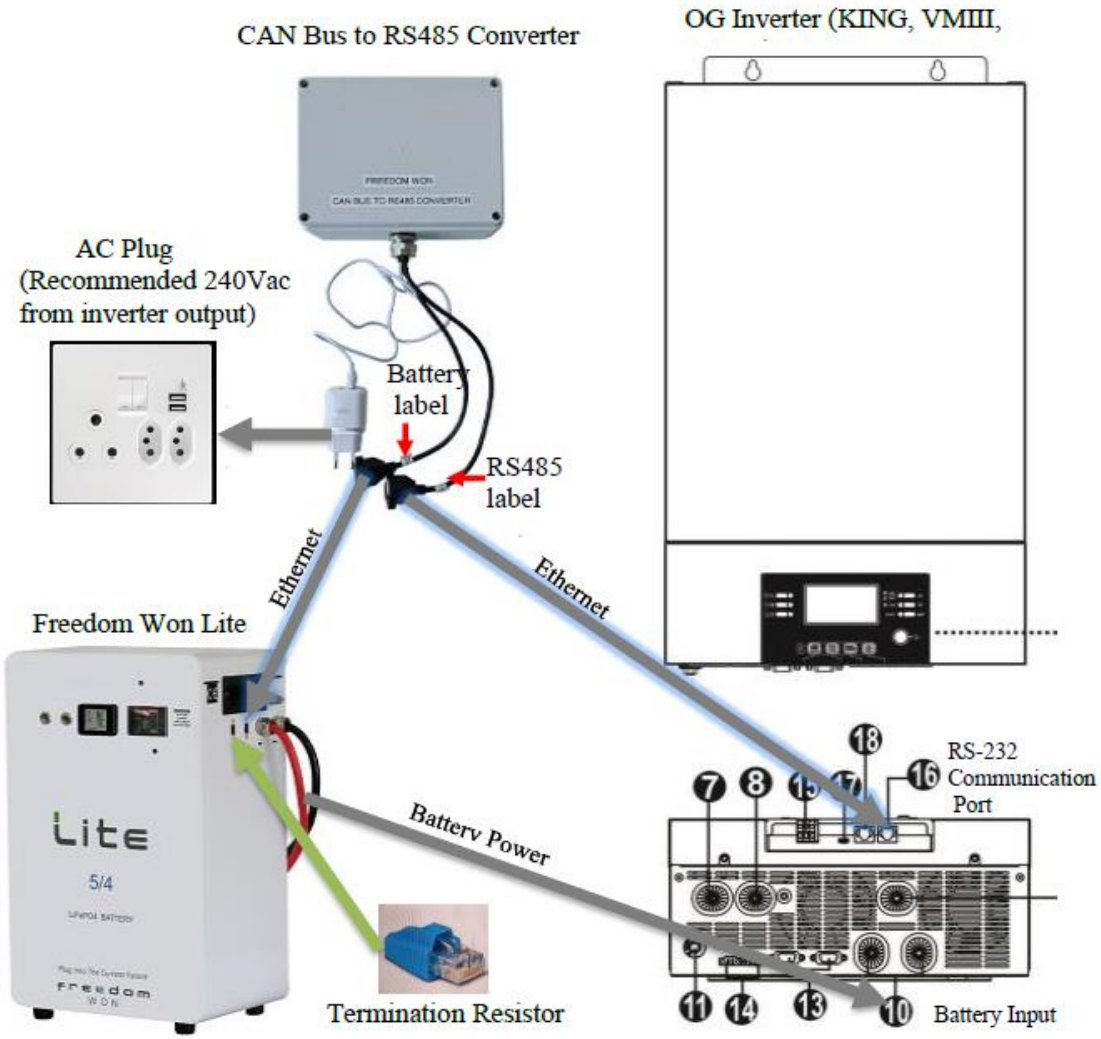

Contact SegenSolar (PTY) Ltd | **Email: info@segensolar.co.za | Tel: 011 085 2600**

Setup guide with compatible batteries

Hubble Lithium

BMS COMMUNICATION

- Cloudlink - BMS compatible
- Without cloudlink : Select 05 “USE” on program 05. Settings - https://www.hubblelithium.co.za/kodak
- Ensure **DIP switches are correct**

AM-2

ADDRESS	CODES THE SWITCH POSITION			
	#1	#2	#3	#4
1	ON	OFF	OFF	OFF
2	OFF	ON	OFF	OFF
3	ON	ON	OFF	OFF
4	OFF	OFF	ON	OFF
5	ON	OFF	ON	OFF
6	OFF	ON	ON	OFF
7	ON	ON	ON	OFF
8	OFF	OFF	OFF	OFF
9	ON	OFF	OFF	ON
10	OFF	ON	OFF	ON
11	ON	ON	OFF	ON
12	OFF	OFF	ON	ON
13	ON	OFF	ON	ON
14	OFF	ON	ON	ON
15	ON	ON	ON	ON

AM-5 & AM-10

ADDRESS	CODES THE SWITCH POSITION			
	#1	#2	#3	#4
1	OFF	OFF	OFF	OFF
2	ON	OFF	OFF	OFF
3	OFF	ON	OFF	OFF
4	ON	ON	OFF	OFF
5	OFF	OFF	ON	OFF
6	ON	OFF	ON	OFF
7	OFF	ON	ON	OFF
8	ON	ON	ON	OFF
9	OFF	OFF	OFF	ON
10	ON	OFF	OFF	ON
11	OFF	ON	OFF	ON
12	ON	ON	OFF	ON
13	OFF	OFF	ON	ON
14	ON	OFF	ON	ON
15	OFF	ON	ON	ON
16	ON	ON	ON	ON

Model	Voltage	Bulk/Equalised (Vdc)	Float Voltage (Vdc)	Cutoff Voltage (Vdc)	Max Discharge Current (A)
AM-2	48V	53.8	53.8	44	100A
AM-4	24V	29	29	23.8	100A
AM-5	48V	55.2	55.2	47	100A
AM-10	48V	55.2	55.2	47	150A

Contact SegenSolar (PTY) Ltd | **Email: info@segensolar.co.za | Tel: 011 085 2600**

Setup guide with compatible batteries

Pylontech

BMS COMMUNICATION

- BMS communication cable **included with the KODAK OG inverter**
- Using Kit Builder will ensure no parts are missed
- Ensure **DIP switches are correct**
- Select **PYL on program 05**

Dip1	Dip2	Dip3	Dip4	The corresponding position of switch	Status
0	0	0	0		RS485:115200 CAN terminal resistance: connected
1	0	0	0		RS485:9600 CAN terminal resistance: connected

Applicable to RS485 communication with all Kodak inverters

Dipswitch “1” set to “ON” position

NB: Newer Pylontech models (US2000C, US3000C, UP5000) appear upside, set as shown in image

BMS cable port (RS485)



Setup guide with compatible batteries

Giter 2500-48/24

BMS COMMUNICATION

- BMS communication cable : GITER-RS-3M

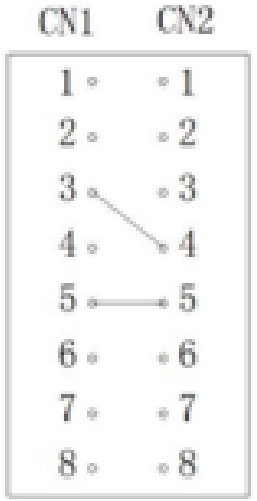

- Ensure **DIP switches are correct**
- Select **“Lib” on program 05**

No of batteries	Battery 1	Battery 2	Battery 3	Battery 4	Battery 5	Battery 6
1x G2500-XX						
2x G2500-XX						
3x G2500-XX						
4x G2500-XX						
5x G2500-XX						
6x G2500-XX						

Contact SegenSolar (PTY) Ltd | **Email: info@segensolar.co.za | Tel: 011 085 2600**

PARALLEL FEATURE

OGS/OG-Plus/OG-7.2

- Up to **9 units** in parallel (**6** on the OG7.2 & OG10)
- Three phase achievable
- Perfect for unbalanced phases
- Built in parallel cards
- Parallel cables included



Contact SegenSolar (PTY) Ltd | **Email: info@segensolar.co.za | Tel: 011 085 2600**

PARALLEL FEATURE WIRING EXAMPLE

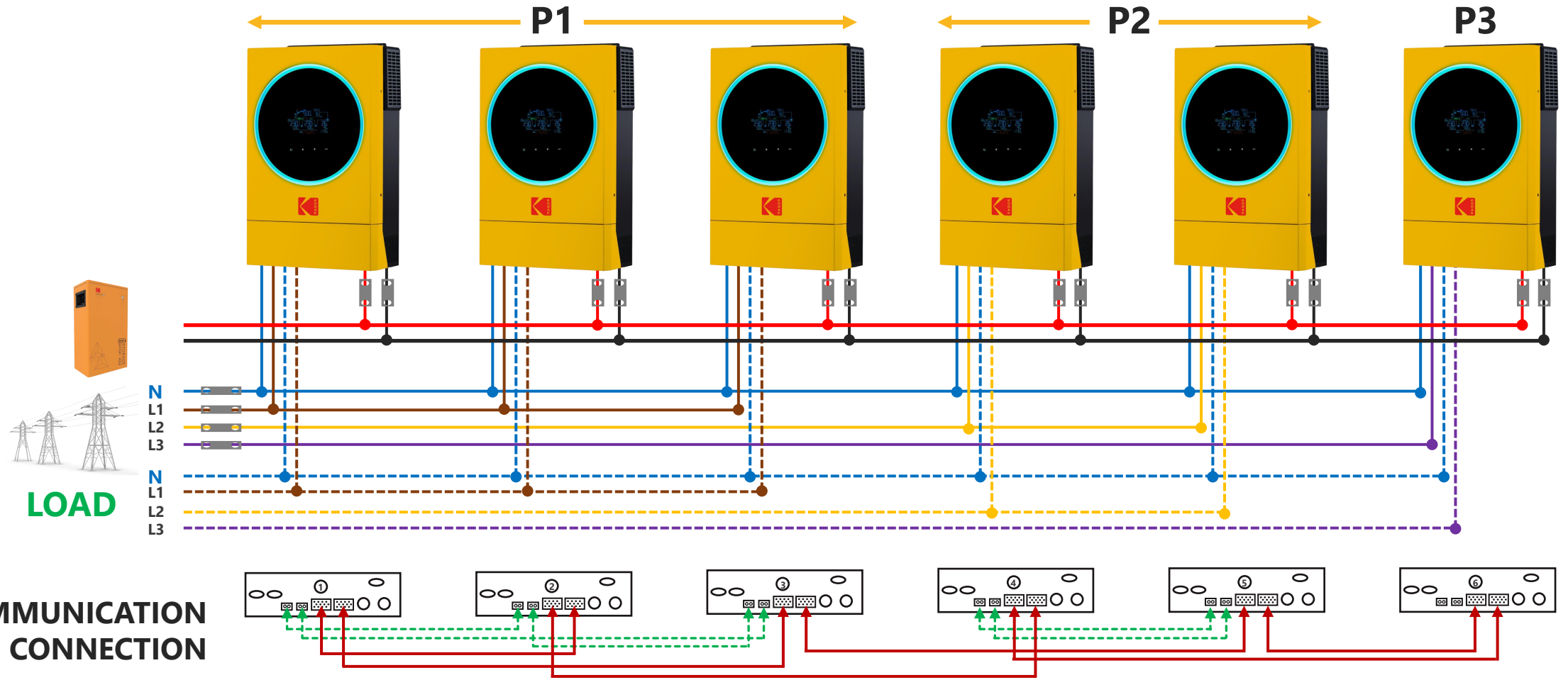

Contact SegenSolar (PTY) Ltd | **Email: info@segensolar.co.za | Tel: 011 085 2600**

PROGRAMMING

QUICK SET-UP OG/OG-Plus

- Enter **programming mode**
- If there is parallel inverters, please select '**USE**' on slave inverters
- Consult product documentation for **more info**

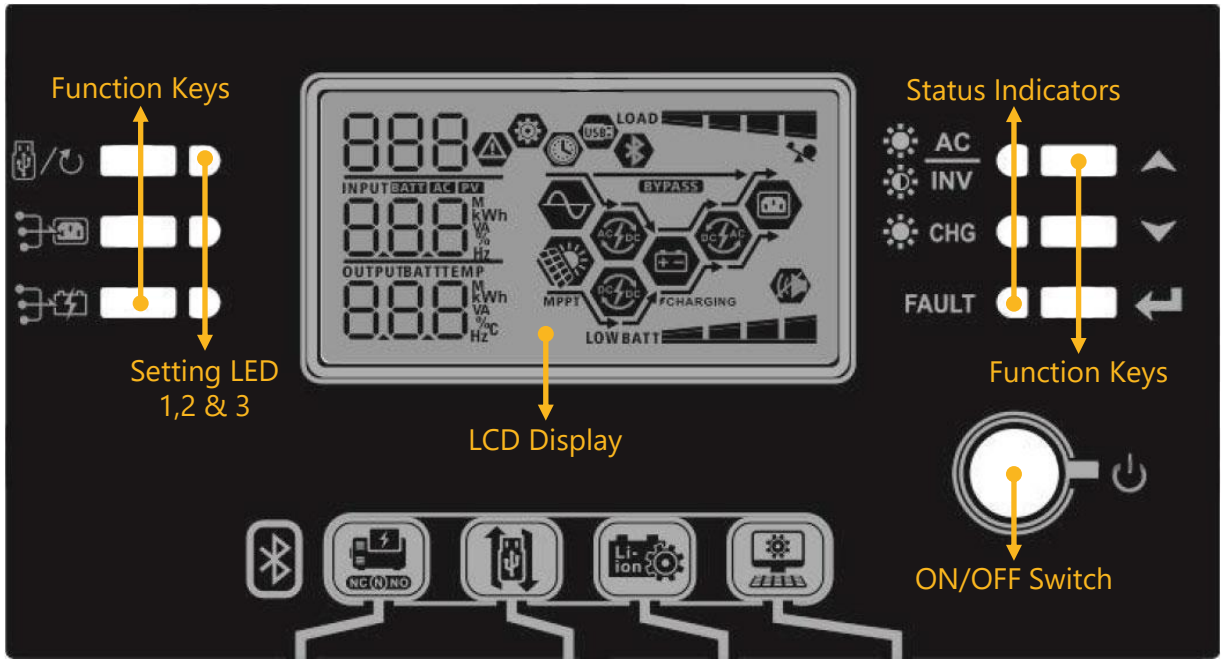



PROGRAMMING

QUICK SET-UP OG/OG-Plus

- Enter **programming mode**
- If there is parallel inverters, please select '**USE**' on slave inverters
- Consult product documentation for **more info**

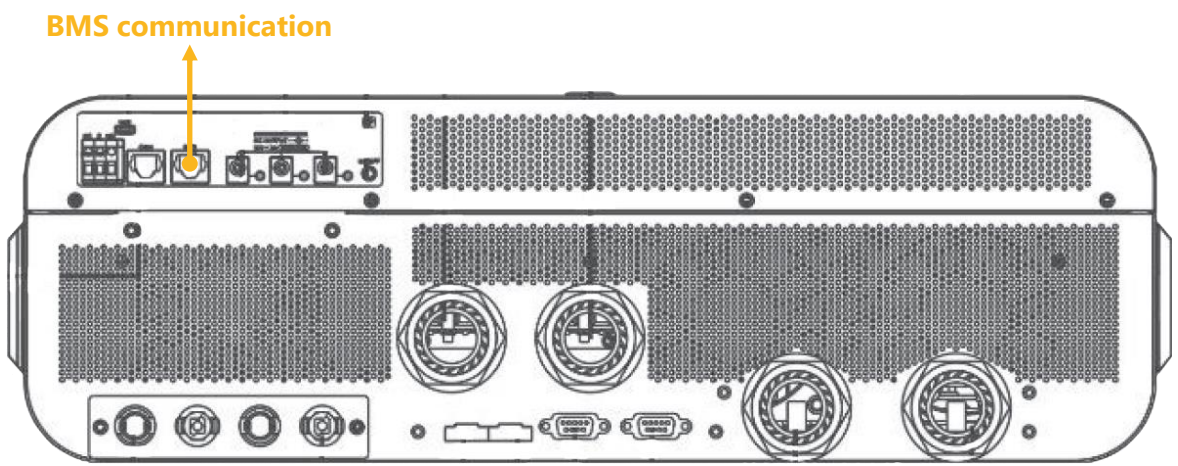

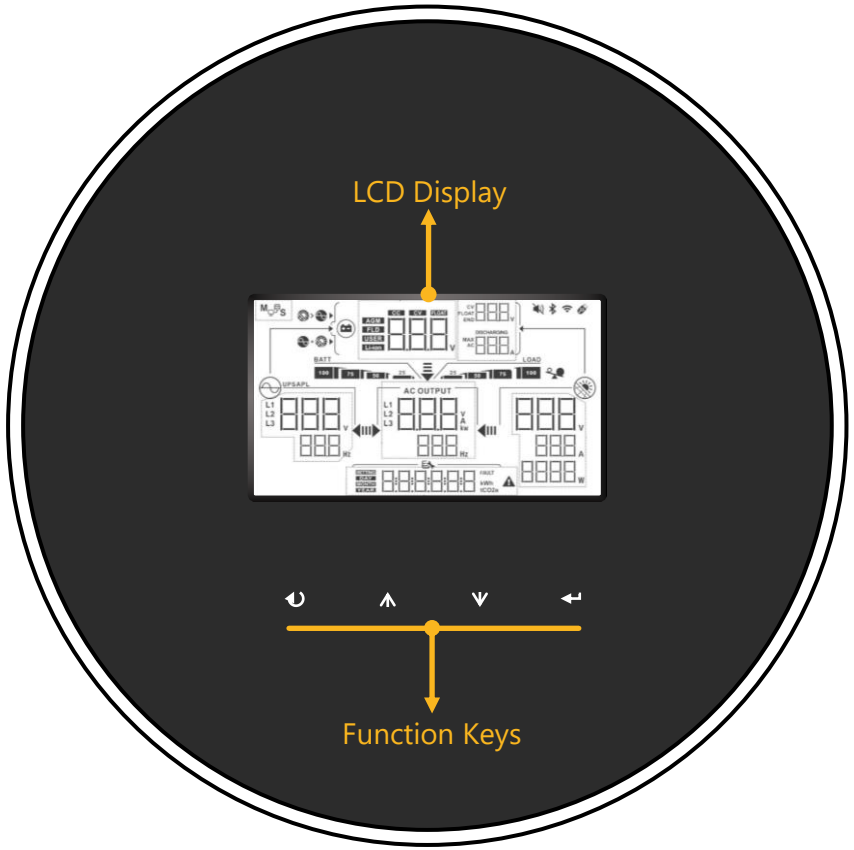

ON/OFF Switch

Contact SegenSolar (PTY) Ltd | **Email: info@segensolar.co.za | Tel: 011 085 2600**

PROGRAMMING

Working modes:

Normal “back up” scenario – keep batteries charged , only discharge when grid fails.

Battery “back up” scenario which prioritized solar instead of grid– keep batteries charged , only discharge when solar & grid fails.

Self Consumption scenario – most cost saving, prioritizing solar and battery , only use grid when both fails.

Setting Programs:

Program	Description	Selectable option	
00	Exit setting mode	Escape 00 ESC	
01	Output source priority: To configure load power source priority	USB : Utility first (default) 01 USb	Utility will provide power to the loads as first priority. If Utility energy is unavailable, solar energy and battery provides power the loads.
		SUB: Solar first 01 SUb	Solar energy provides power to the loads as first priority. If solar energy is not sufficient to power all connected loads, utility energy will supply power to the loads at the same time. Battery provides power to the loads only when solar and utility is not sufficient.
		SBU priority 01 SbU	Solar energy provides power to the loads as first priority. If solar energy is not sufficient to power all connected loads, battery energy will supply power to the loads at the same time. Utility provides power to the loads only when battery voltage drops to either low-level warning voltage or the setting point in program 12 or solar and battery is not sufficient.

OFF-GRID RANGE

GENERATOR

When pairing a generator with the Kodak OG range, the generator needs to adhere to the following specifications:

- The generator must be **150%** larger than inverter
- Must have an AVR
- Generator waveform THD: **<10%**
- Generator Vrms range: **110 ~ 270Vac**
- Generator voltage crest factor (Vpeak/Vrms): **<1.6**
- Generator peak voltage: **<380V** (for three phase system)
- Frequency range: **45hz – 63hz**
- Frequency slew rate: **<0.3hz/sec**

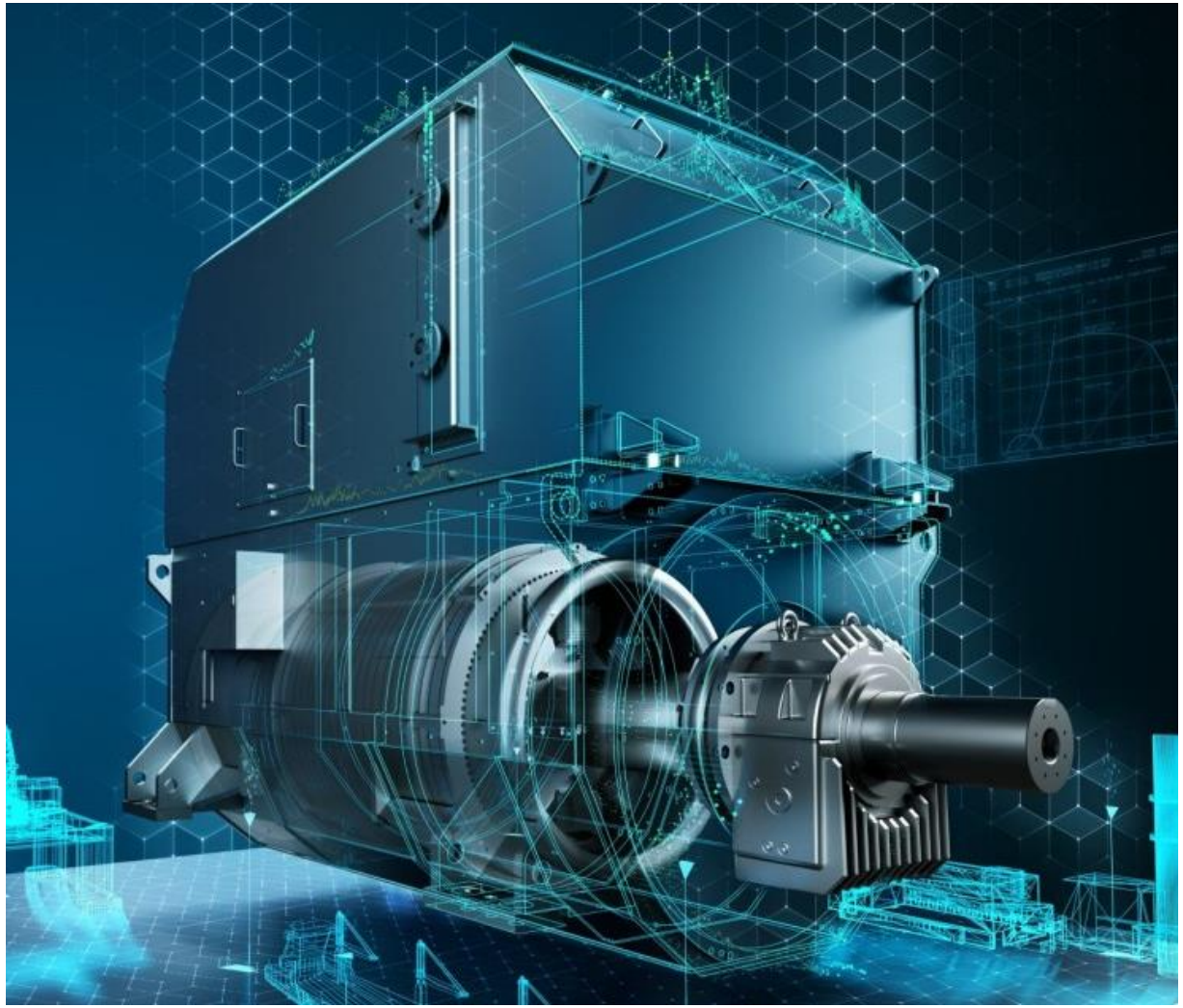

Monitoring

BLUETOOTH/Wi-Fi

- Download **Watchpower app** via:

GET IT ON Google Play

Available on the App Store

- Password **12345678**
- Consult documentation on product page for **detailed guide**

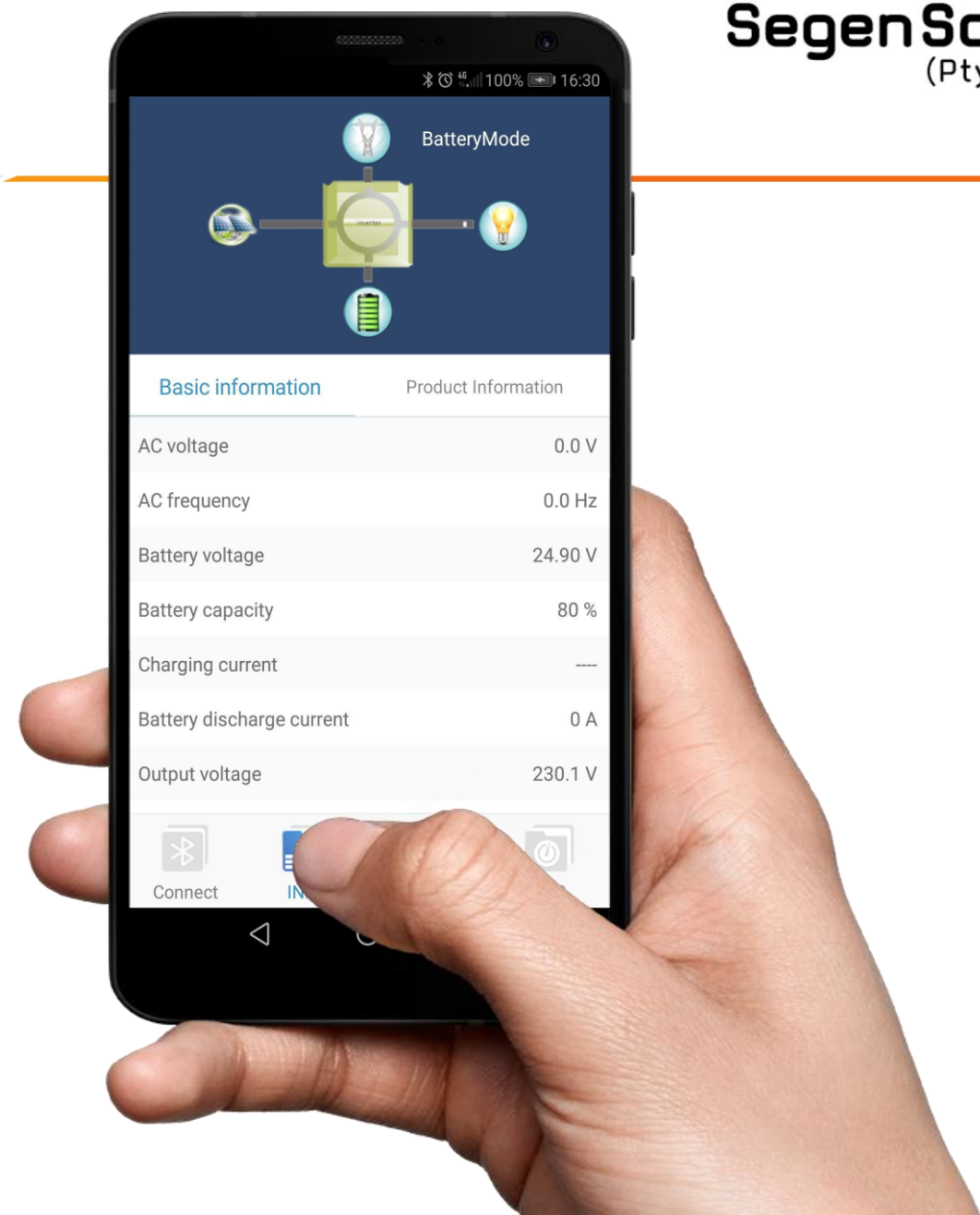

Contact SegenSolar (PTY) Ltd | **Email: info@segensolar.co.za | Tel: 011 085 2600**

OFF-GRID RANGE

TROUBLESHOOTING

"**Error 61 – BMS communication failed**"

POSSIBLE CAUSES:

- Incorrect/damaged **BMS cable** used – cable tester
- Incorrect **DIP switches** set on battery – Consult documentation on product page
- Incorrect **battery type** selected – Program 05
- Incorrect **port used** on battery/inverter – User manual on product page

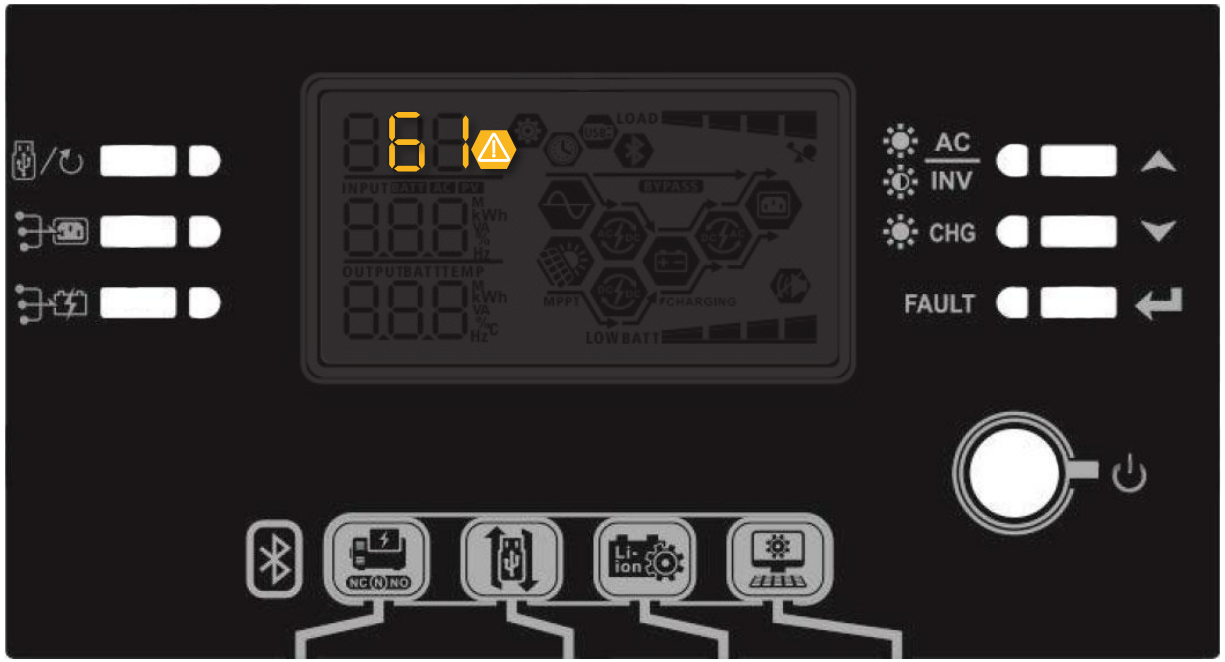

NOTE:

- OG range only uses **RS485** with a Baud rate of **9600**
- BMS cable **included with battery/inverter** or bought from Segen Solar – Ask your account manager or technical support advisor **for assistance**

OFF-GRID RANGE

WARRANTY

- **3-year** standard warranty
- Repair options available
- If there is a fault on the unit, **contact SegenSolar Technical**
- **24-hour** diagnostic time

RETURNS MAY BE REPAIRED, OR A REFURBISHED UNIT WILL BE OFFERED



AC & DC Protection

DC & AC Protection

- AC and DC protection requirements are not an option but a REQUIREMENT
- Safety and protection against electrical shock is the first priority
- The Responsibility is that of both the installer and the Installation Electrician
- Insurance Companies , banks and Municipalities are now insisting on proof of protection and safety devices





Or even worse- damaged Lives

DC & AC Protection

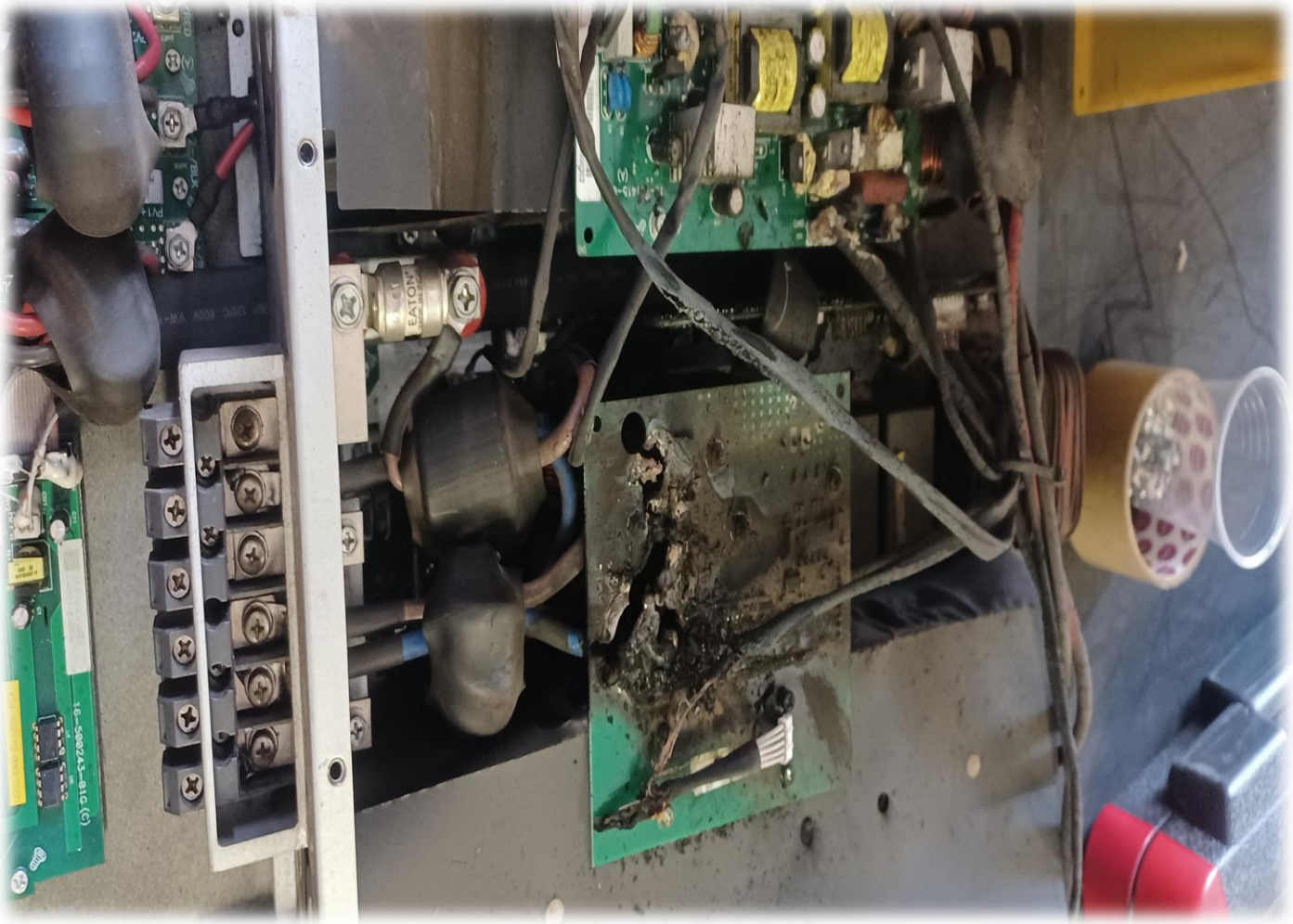



AVS SURGE PROTECTION BOXES

AVS PROTECTION DEVICE

- **High voltage** - High voltages from the grid can damage internal components
- **Low voltage** - Under voltages from the grid could damage internal components by not providing the components with sufficient voltage
- **Class III voltage spikes/surges** - Small voltage spikes experienced when there is faults on the grid lines
- **Power-back surges** - High power surges when grid comes back online, such as after loadshedding

Available in single phase and three phase models



Contact SegenSolar (PTY) Ltd | **Email: info@segensolar.co.za | Tel: 011 085 2600**

SEGEN PROTECTION BOXES

PROTECTION BOX - DC

- Wide range of DC protection boxes
- SPD type **I or I/II**
- The correct DC protection box will be automatically selected by Kit Builder

PROTECTION BOX - AC

- AC protection box
- SPD type **II**
- The correct AC protection box will be automatically selected by Kit Builder

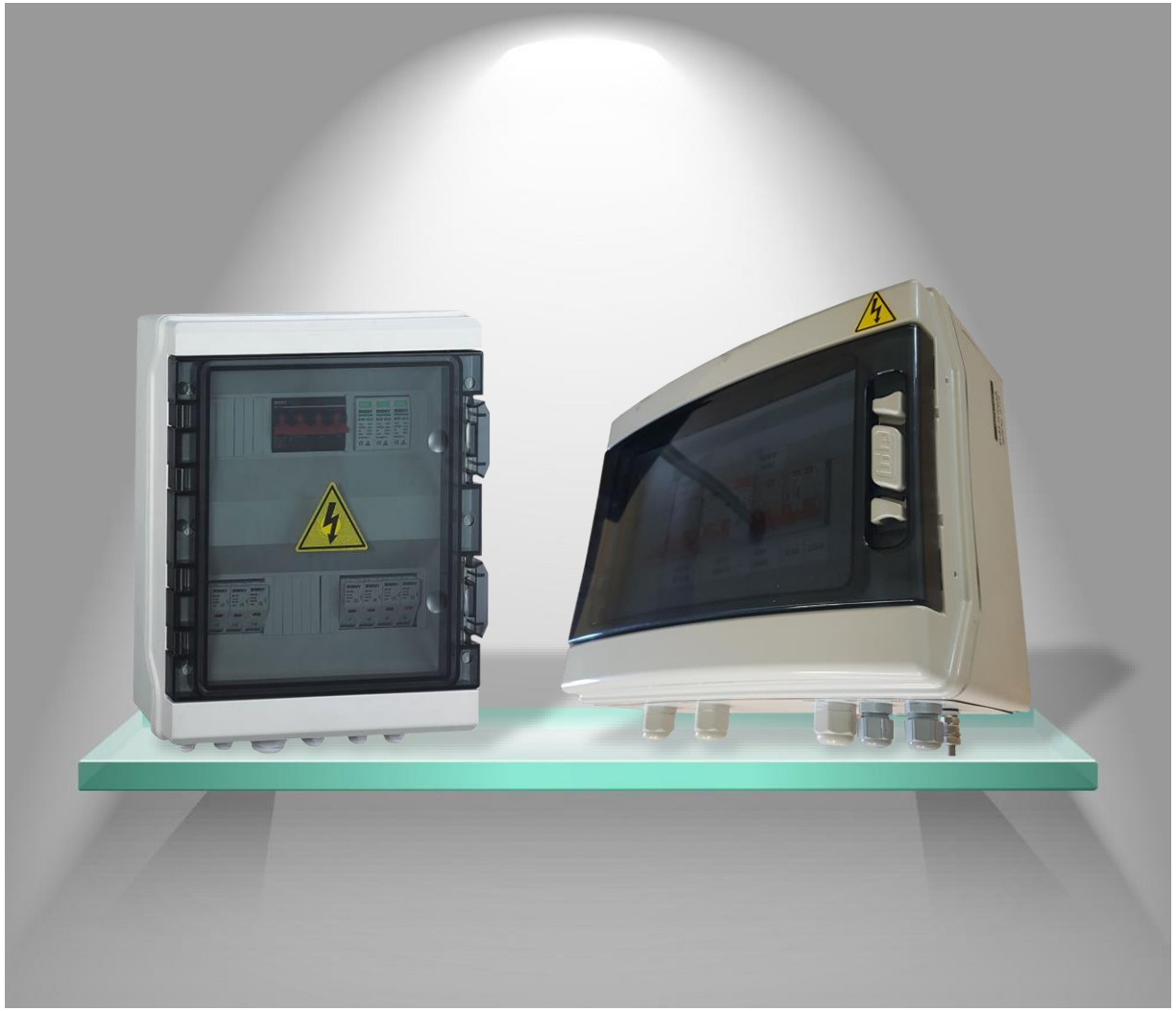

Contact SegenSolar (PTY) Ltd | **Email: info@segensolar.co.za | Tel: 011 085 2600**

ASSURED & SUPPORTED

SEGEN ASSURED

- ✓ Check **firmware**
- ✓ Check **functionality**
- ✓ Check **accessories**
- ✓ All Kodak products are **automatically Segen Assured**

SEGENSOLAR SUPPORT

- ✓ **Pre-sales**
  - ✓ Assist with system advice
  - ✓ Product training
- ✓ **After-sales**
  - ✓ Assist with telephonic technical support



Contact SegenSolar (PTY) Ltd | **Email: info@segensolar.co.za | Tel: 011 085 2600**

SegenSolar (Pty) Ltd

THANK YOU

FOR A RECAP OF TODAY'S SEMINAR **PLEASE VISIT OUR PORTAL**







RECAP O

Contact SegenSolar (PTY) Ltd | **Email: info@segensolar.co.za | Tel: 011 085 2600**